NOTES:

1. ALL DIMENSION ARE IN MILLIMETERS.
2. CONDUIT SHALL BE 150mm MEDIUM OR HEAVY DUTY ORANGE UNDERGROUND TO AS2053.2
3. CABLE CONDUITS TO FALL TO THE HV TRENCH.
4. ALL SHARP EDGES TO BE REMOVED AND CONDUIT BELLMOUTHS INSTALLED IN BOTH ENDS OF CONDUIT.
5. CLEAN OUT ALL CONDUITS ON COMPLETION OF INSTALLATION AND INSTALL BLANKING PLUGS ON BOTH ENDS.
6. DEFLECTION OF 15% FOR STRAIGHT RUNS IS PERMITTED AT TRENCH END ONLY. CONDUITS APPROACHING THE TRENCHES AT GREATER ANGLES MUST ENTER IN A BEND.
7. CONDUITS AND JOINTS TO BE WATERPROOFED.
8. CONDUIT TO HAVE A MINIMUM BENDING RADIUS OF 1200mm.
9. EXACT DIMENSIONS TO BE SHOWN IN PROJECT SPECIFIC DRAWINGS. REFER TYPICAL FLOOR PLANS 4921-13 & 4921-14 FOR GUIDANCE.
10. MINIMUM 200mm SEPARATION/COVER IS REQUIRED FROM BASEMENT.
11. CLEAR VISIBLE PERMANENT SURFACE MARKERS AT 300mm INTERVALS LONG THE CONDUIT ROUTE ARE REQUIRED. THE MARKERS SHOULD BE CENTRALLY AFFIXED BELOW THE CONDUITS (BY STAINLESS STEEL MUSHROOM HEAD STRIKE ANCHOR) TO ALL SURFACES (INCLUDING FLOOR, CEILINGS, WALLS AND BEAMS). SUITABLE MARKING CONSIST A MINIMUM 150mm X 65mm STAINLESS STEEL WARNING PLATE WITH THE WORDS "DANGER, ELECTRICAL CABLE. REDUCED COVER".

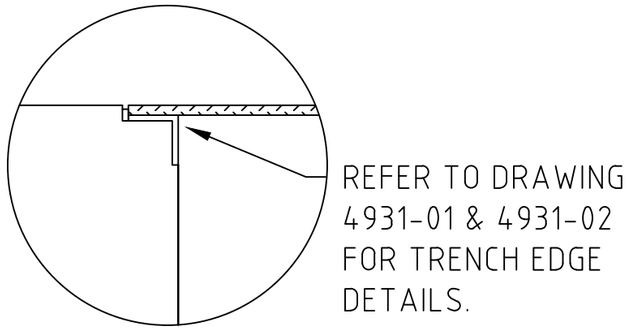

DETAIL B

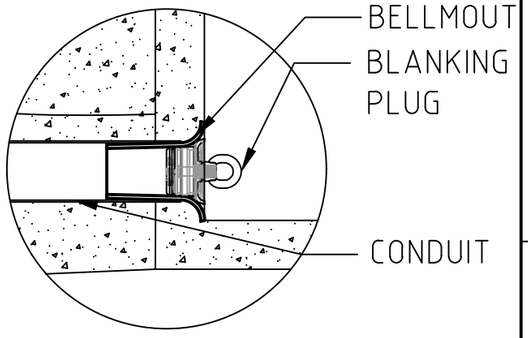

DETAIL A

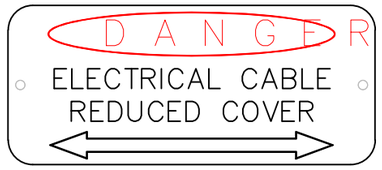

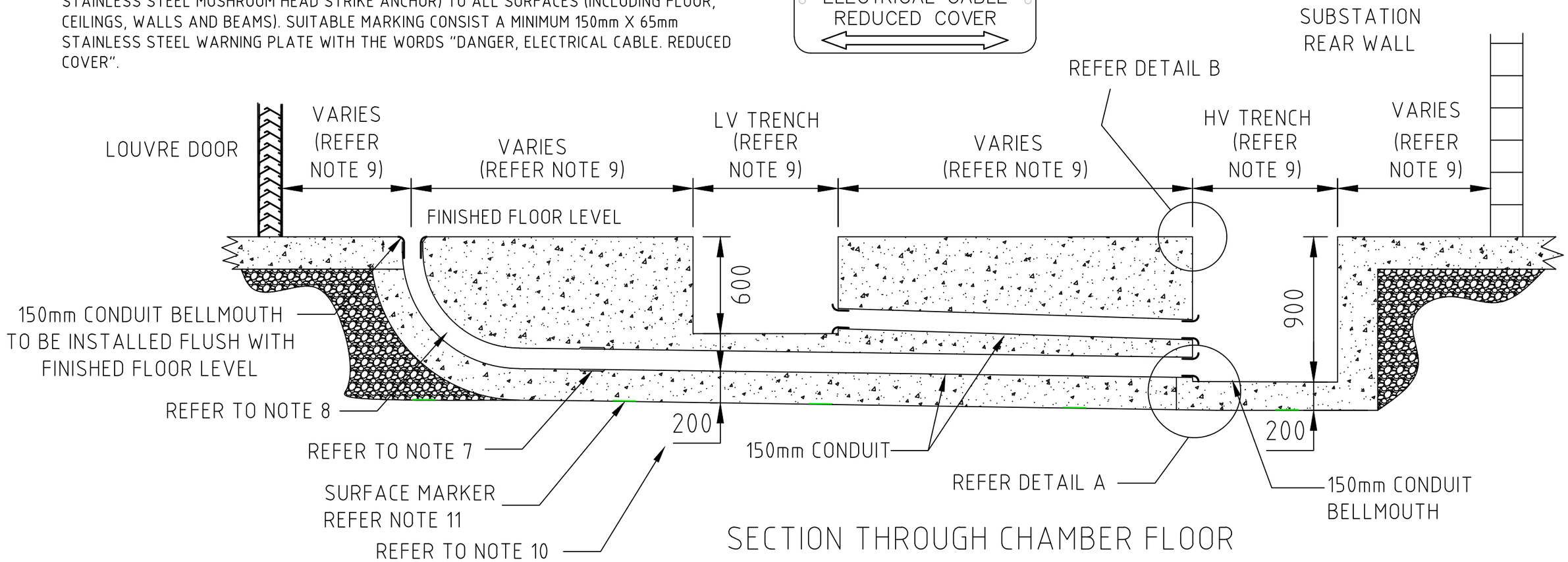

SECTION THROUGH CHAMBER FLOOR

No	Revision	Date	Checked	Approved
B	LOGO UPDATED	26/03/2008	AC	GA
E	LOGO AND REFERENCES UPDATED	18/03/2018	B. Suthar	W. Ibrahim
F	NOTES 4,5 & 9 AMENDED AND REFERENCED TO LV & HV TRENCH - KV	12/09/2023	J. Primmer	W. Cleland
G	NOTE 10 & 11 ADDED ALONG WITH BASEMENT COVER	13/12/2023	N. Azizi	W. Cleland

The information contained within this drawing & associated electronic file shall remain the property of Evoenergy and shall not be copied or used for any other purpose without express written permission from Evoenergy. © Evoenergy. 2018.

Drawn: S.Read
Designed: E. Amaratunga
Checked: M. Charlton
Approved:
Project No:

ACT Cadastral information supplied by the ACT Environment & Sustainable Development Directorate. © ACT Gov. 2018.

evoenergy

TRANSFORMER CONDUIT ARRANGEMENT FOR CHAMBER SUBSTATION

Scale: N.T.S
Date: 11/05/1995
Sheet No:
Work Pack No:
File:
Status: Current
A3
4931-03
Rev G

Date Plotted: 12/01/2024 Plot Style: Electrical.ctb